UDOR

SERIE - SERIES

MK

MKC 13/28 S
MKC 15/24 S MKL 5.0/35 W
MKC 15/28 S

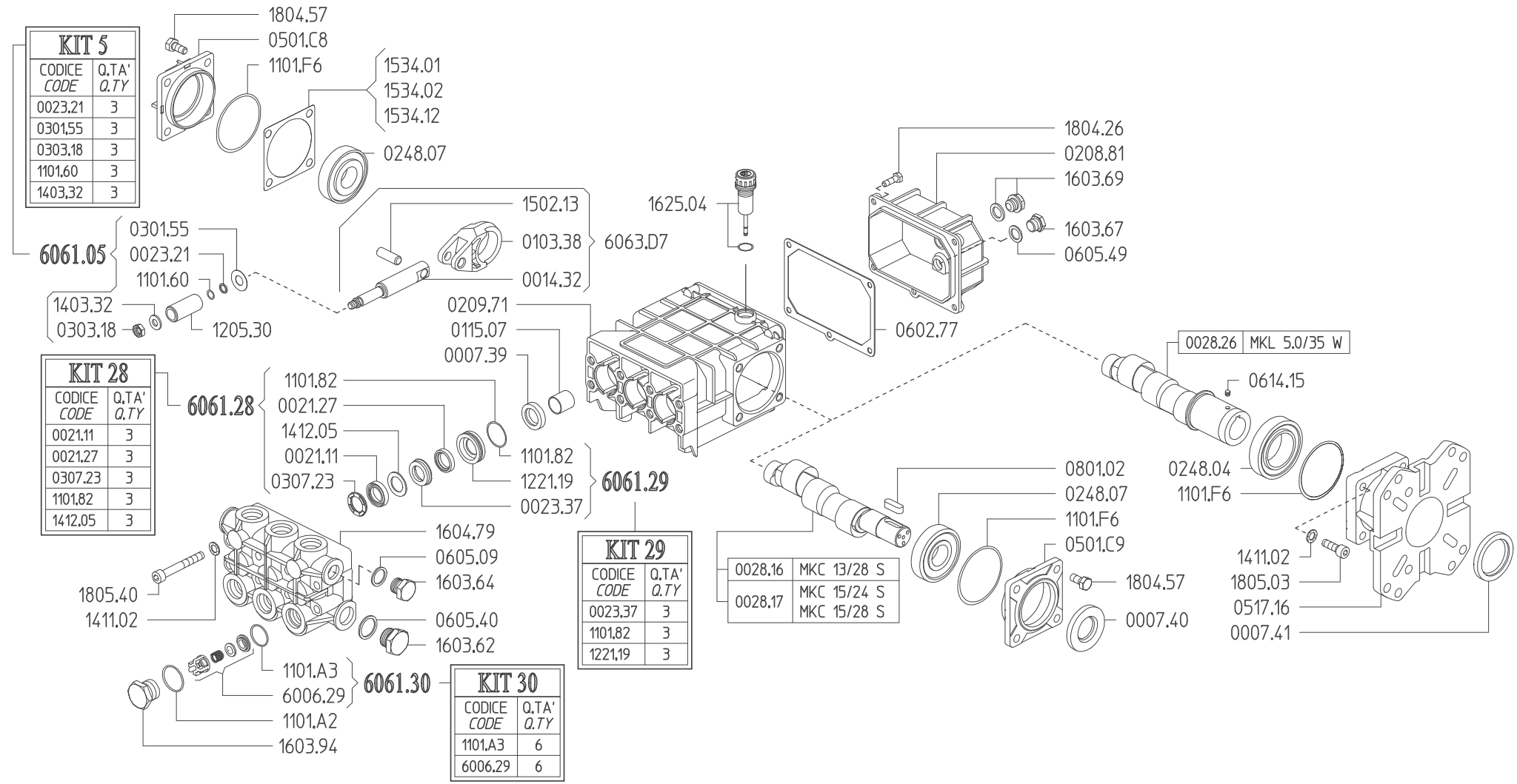

KIT 5

CODICE CODE	Q.TA' Q.TY
0023.21	3
0301.55	3
0303.18	3
1101.60	3
1403.32	3

KIT 28

CODICE CODE	Q.TA' Q.TY
0021.11	3
0021.27	3
0307.23	3
1101.82	3
1412.05	3

KIT 29

CODICE CODE	Q.TA' Q.TY
0023.37	3
1101.82	3
1221.19	3

KIT 30

CODICE CODE	Q.TA' Q.TY
1101.A3	6
6006.29	6