W162

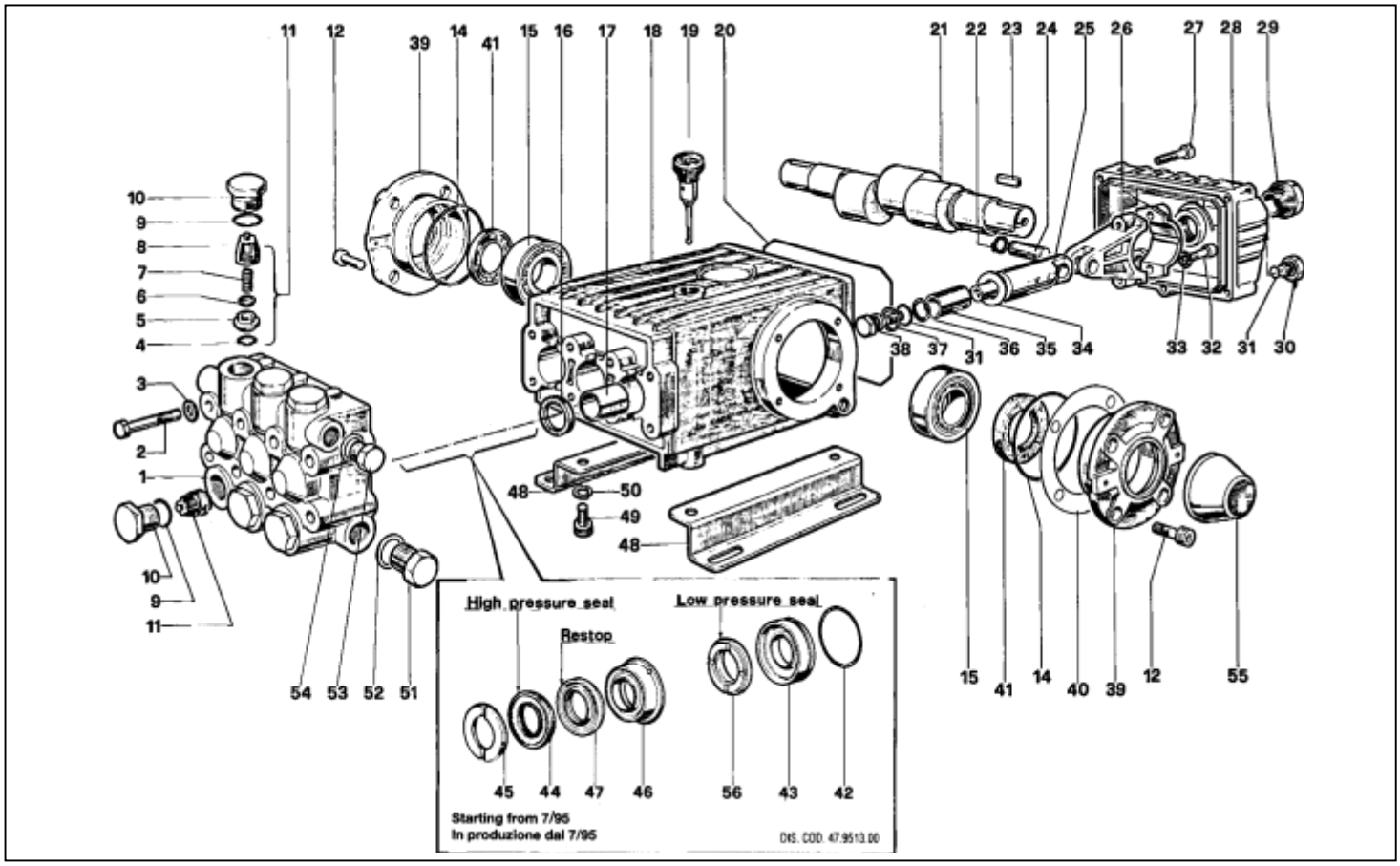

POS	REF	DESCRIPTION	KIT NO	QTY
1	47.1202.41	MANIFOLD – NICKEL		1
2	99.3206.00	SCREW M8 X 70 UNI 5737		8
3	96.7020.00	WASHER DIA 8 UNI 1736		8
4	90.3841.00	O-RING DIA 17.13 X 2.62	KIT 1	6
5	36.2003.66	VALVE SEAT	KIT 1	6
6	36.2001.76	VALVE	KIT 1	6
7	94.7376.00	SPRING DIA 9.4 X 14.8	KIT 1	6
8	36.2002.51	VALVE GUIDE	KIT 1	6
9	90.3847.00	O-RING DIA 20.24 X 2.62	KIT 5	6
10	98.2222.00	CAP M24 X 2 X 16 SPEC NK	KIT 5	6
11	36.7032.01	VALVE UNIT	KIT 1	6
12	99.3039.00	SCREW M8 X 16 UNI 5931		8
14	90.3913.00	O-RING DIA 67.95 X 2.62		2
15	91.8375.00	BALL BEARING 32206		2
16	90.1625.00	OIL SEAL DIA 22 X 32 X 5.5	KIT 2	3
17	90.9126.00	BUSH DIA 22 X 25 X 30	KIT 2	3
18	47.0100.22	CRANKCASE		1
19	98.2106.00	OIL DIPSTICK G 3/8		1
20	90.3922.00	O-RING DIA 133.02 X 2.62		1
21	47.0201.35	CRANKSHAFT P. DI. F		1
22	90.0557.00	CIRCLIP		6
23	91.4878.00	KEY		1
24	97.7380.00	PISTON PIN DIA 13 X 35		3
25	47.0503.56	PISTON GUIDE		3
26	47.0300.01	CONNECTING ROD		3
27	99.1912.00	SCREW M6 X 30 UNI 5931		5
28	47.1601.22	CRANKCASE COVER		1
29	97.5968.00	OIL SIGHT GLASS G ¾		1

POS	REF	DESCRIPTION	KIT NO	QTY
30	96.2041.00	CAP G ¼ X 9		1
31	90.3585.00	O-RING DIA 10.82 X 1.78	KIT 6	4
32	99.3099.00	SCREW M8 X 35 UNI 5931		6
33	96.7014.00	WASHER DIA 8.4 X 13 X 0.8		6
34	96.7286.00	WASHER DIA 14 X 28 X 0.5	KIT 6	3
35	47.0405.09	PISTON DIA 22		3
36	90.5067.00	ANTI-EXTRUSION RING	KIT 6	3
37	96.7280.00	WASHER DIA 14 X 18.5 X 0.5	KIT 6	3
38	47.2195.66	PISTON CAP SCREW	KIT 6	3
39	47.1500.22	CRANKCASE COVER		2
40	97.5678.00	SHIM		2
41	90.1648.00	OIL SEAL DIA 30 X 55 X 7	KIT 3	2
42	90.3616.00	O-RING DIA 34.65 X 1.78	KIT 14-29	3
43	47.0806.70	PACKING RETAINER DIA 22	KIT 14-29	3
44	90.2725.00	HIGH PRESSURE SEAL DIA 22	KIT 29-148	3
45	47.1000.51	PACKING SUPPORT DIA 22	KIT 11-29	3
46	47.2170.70	INTERMEDIATE RING DIA 22	KIT 29-149	3
47	90.2730.00	RESTOP SEAL DIA 22	KIT 29-148-149	3
48	47.2000.74	FOOT		2
49	99.3644.00	SCREW M10 X 18 UNI 5931		4
50	96.7106.00	WASHER DIA 10 DIN 7980		4
51	98.2176.00	CAP G ½ X 10		1
52	96.7514.00	WASHER DIA 21.5 X 27 X 1.5		1
53	98.2100.00	CAP G 3/8 X 13		1
54	96.7380.00	WASHER DIA 17.5 X 23 X 1.5		1
55	47.2124.51	SHAFT COVER P. DI. F		1
56	90.2728.00	PACKING DIA 22 LP SEAL	KIT 29-148	3

SERVICE REPAIR KITS AVAILABLE:

KIT NO	KIT 1	KIT 2	KIT 3	KIT 5	KIT 6	KIT 11	KIT 148	KIT 149	KIT 14	KIT 29
POSITIONS INCLUDED	4-5-6-7-8-(11)	16	41	9-10	31-34-36-37-38	45	44-47-56	46-47	42-43	42-43-44-45-46-47-56
N. PCS	6	3	2	6	3	6	3	3	3	1